EJ–EXPANSION JOINT
TJ–TOOL JOINT

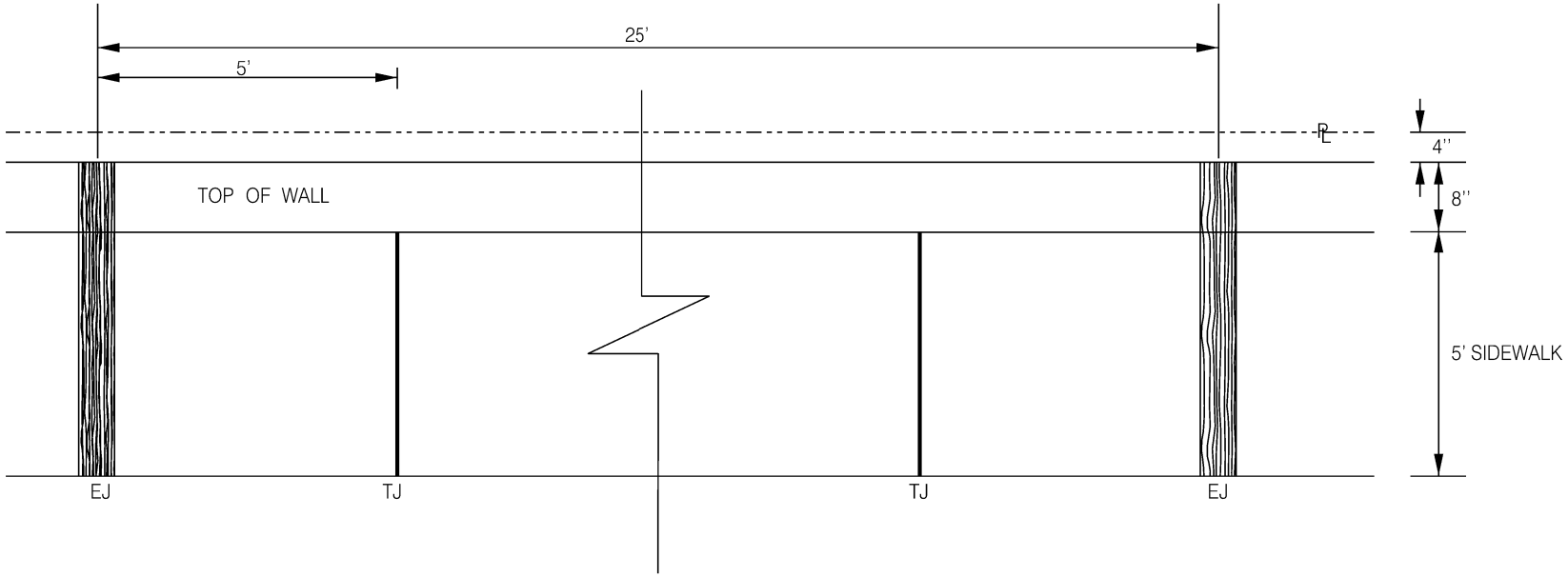

PLAN VIEW

NOTE:
DETAIL SUBJECT TO CHANGE PER DIRECTION OF CITY OF LEWISVILLE ENGINEERING DIVISION.

LEWISVILLE
Deep Roots. Broad Wings. Bright Future.

Standard Details

RETAINING WALL WITH INTEGRAL SIDEWALK

Revisions:

No.	Description	Date

Engineering Department

Office No. 972–219–3490

www.cityoflewisville.com

Dated: 10–24–11

Dated: 8–21–2019

Sheet: 4.5b