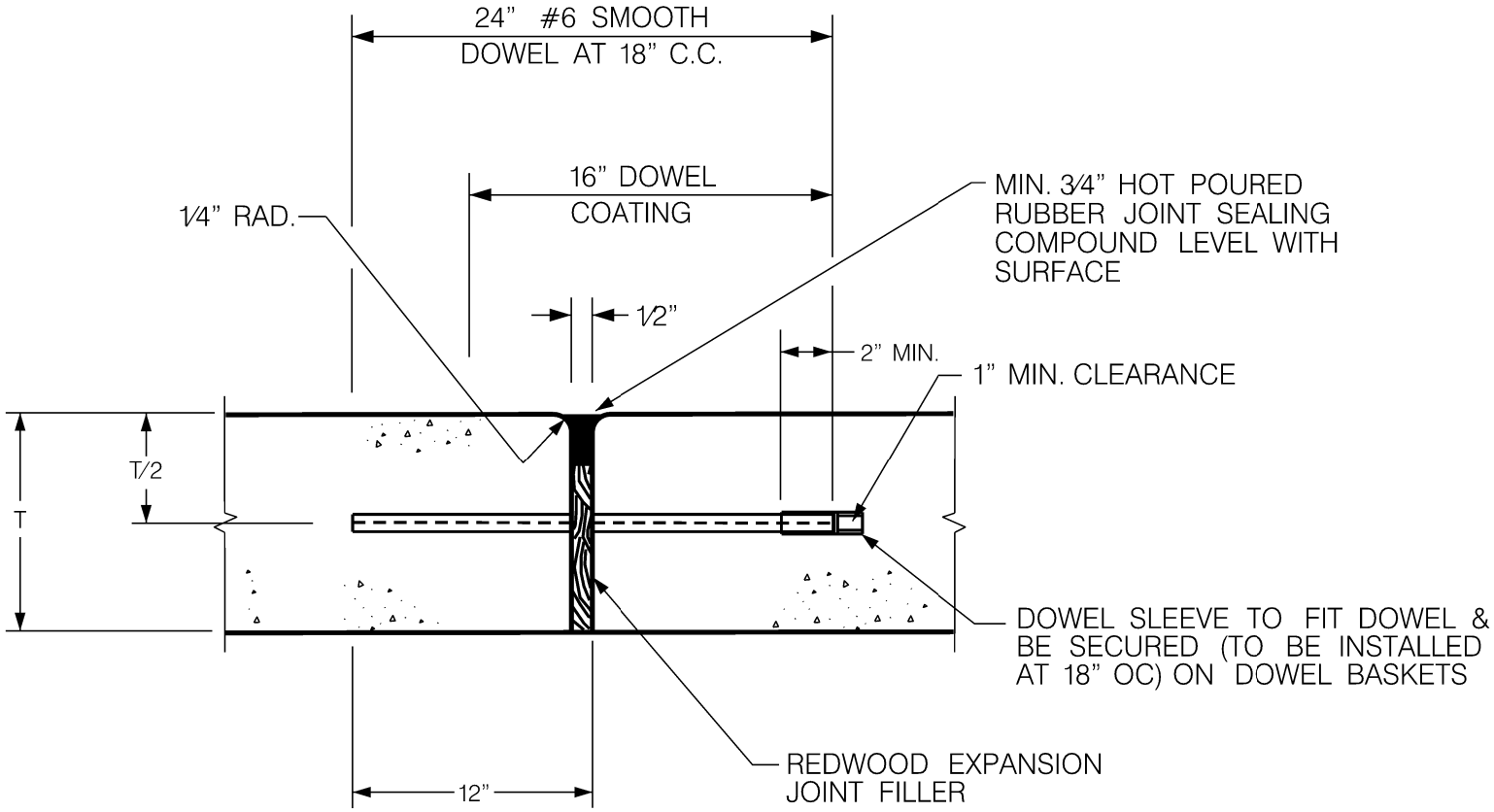

NOTE:

DOWEL SUPPORT SHALL BE OF A METHOD APPROVED BY THE ENGINEER

NOTE:
DETAIL SUBJECT TO CHANGE PER DIRECTION OF CITY OF LEWISVILLE ENGINEERING DIVISION.

LEWISVILLE
Deep Roots. Broad Wings. Bright Future.

Standard Details

TRANSVERSE EXPANSION JOINT

Revisions:

No.	Description	Date

Engineering Department

Office No. 972-219-3490

www.cityoflewisville.com

Dated: 8-13-07

Dated: 2019

Sheet: 2.1